User Manual

Copper Guard

V 2.0

SLT Digital Lab

Table of Contents

Introduction ---------- 01

Package Contents ---------- 02

Device Overview ---------- 03

Installation Instructions ---------- 04

Configuration and Setup ---------- 05

Operation ---------- 06

Maintenance and Troubleshooting ---------- 07

Safety Information ---------- 08

Warranty and Support ---------- 09

Technical Specifications ---------- 10

Introduction

The CopperGuard is a compact, IoT-based copper cable theft alerting device designed to monitor up to 8 copper power lines carrying 48V DC. Built with an ESP32 microcontroller, 8 optocoupler channels, a SIM800L GSM module, and a 3A buck converter, the device continuously checks the integrity of each monitored line.

If any line is cut or tampered with, CopperGuard immediately sends an SMS alert to preconfigured mobile numbers, helping facility managers or utility providers respond quickly and prevent loss or downtime. The device is powered by a stable 5V 2A input and connects easily using screw terminal blocks for secure and reliable installation.

CopperGuard is ideal for applications such as telecom towers, solar farms, street lighting systems, and industrial setups where copper theft can cause serious disruption.

Package Contents

Copper Guard Device	x 1
Power Adapter	x 1

Device Overview

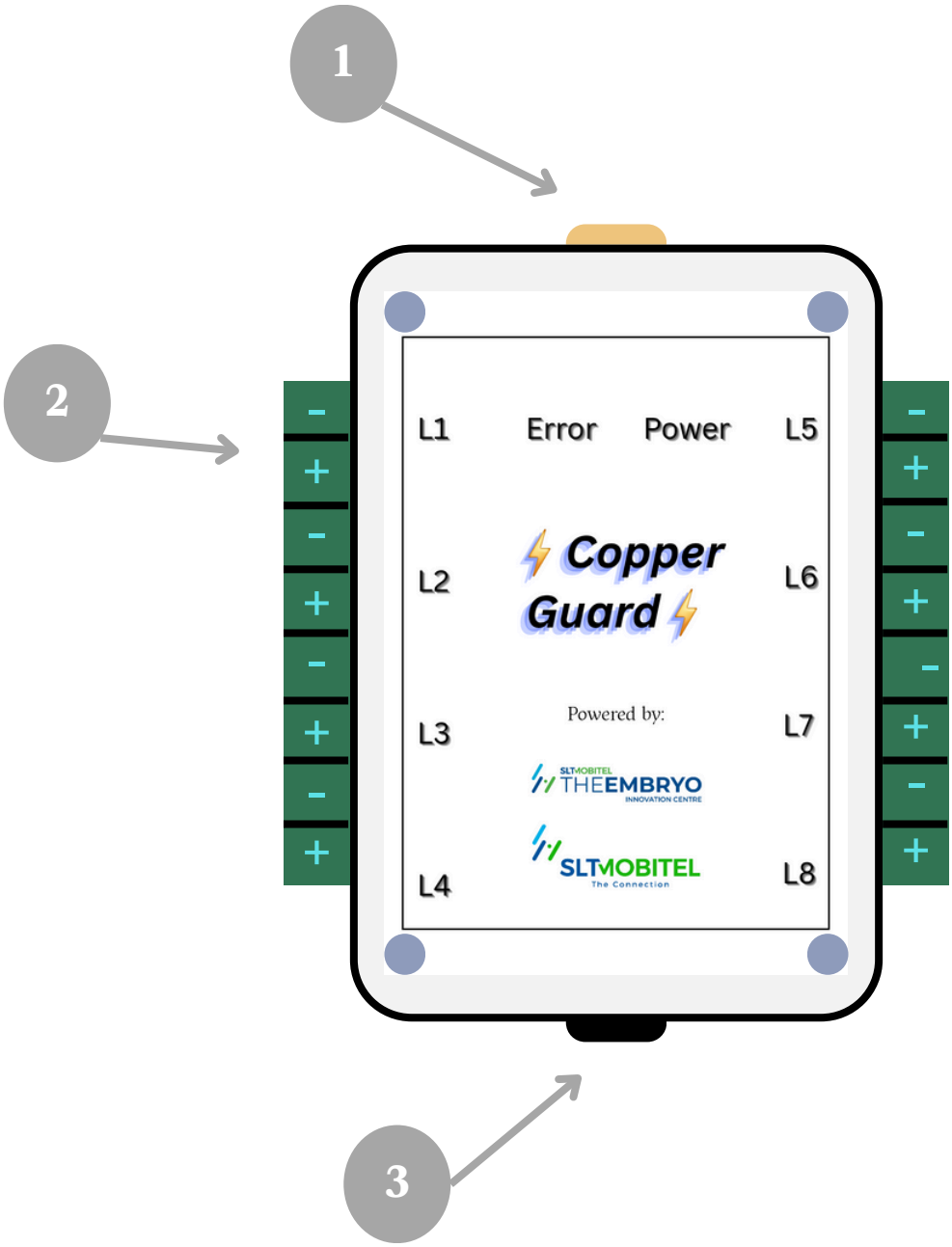

1. Configuration Mode Button
2. Phone Line Connectors
3. Power Input

Installation Instructions

Step 1: Physical Installation

1. Mounting the Device:
   - Use the provided flange clamps on the enclosure to secure the device to a wall, pole, or control panel using screws.
   - Ensure the enclosure is placed in a dry and protected environment to avoid exposure to water or corrosive substances.

2. Wiring the Copper Lines:
   - Connect each copper cable (48V DC lines) to the screw terminals labeled L1 to L8.
   - Follow polarity markings (+/-) carefully.
   - Only connect the lines you want to monitor. Others can be disabled in software.

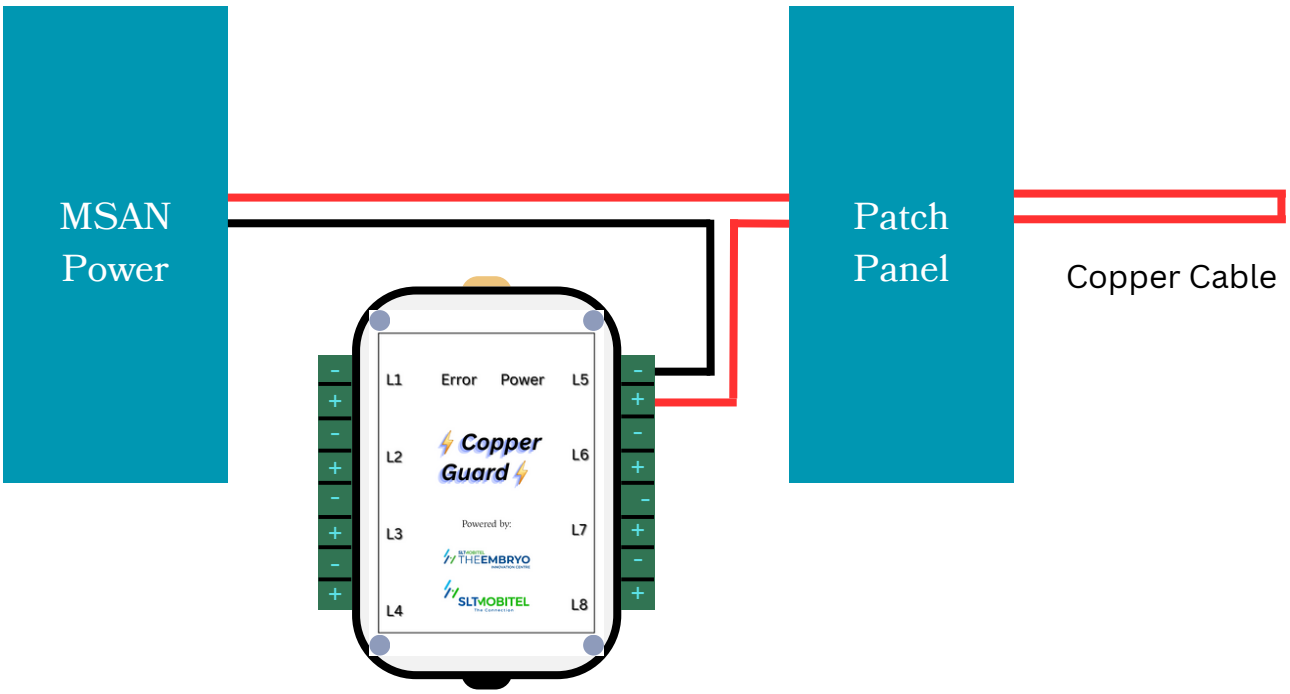

3. Powering the Device:

- Supply a regulated 5V 2A power input using a DC barrel jack (as shown in your image).
- Do not power on yet—proceed to configuration first.

Step 2: First-Time Configuration

⚠️ IMPORTANT: First-time setup must be done before normal operation.

- Enter Configuration Mode:
- Press and hold the configuration mode button (connected to GPIO 21).
- While holding the button, connect the power to the device.
- Release the button once the device powers up.
-

- Connect to Device Hotspot:
  - The device will create a Wi-Fi Access Point (AP) named:
    CCT_Alert_Device_XXXX
  - Where XXXX is your device index (e.g., test device may show CCT_Alert_Device_0008).
  - Use a mobile or laptop to connect to this AP using the password:
    0001digital
- Access Configuration Page:
  - Open a browser and visit: http://192.168.1.1
  - You'll see the configuration UI (as shown in the screenshots).

Fill in the Configuration Form:

Field	Description
Device Name	Custom name to identify this unit (e.g., Tower B North)
Location	Physical location (e.g., Colombo 01)
Status SMS	Recipients Comma-separated mobile numbers to receive regular status updates (e.g., +94750279306,+94753124128)
Emergency Alert	Recipients Comma-separated numbers to alert when a line is cut
Status SMS Interval (Minutes)	How often to send status updates (e.g., 1 = every minute)
Line 1–8	Toggles Enable or disable individual copper line monitoring. Green means active.

Configuration and Setup

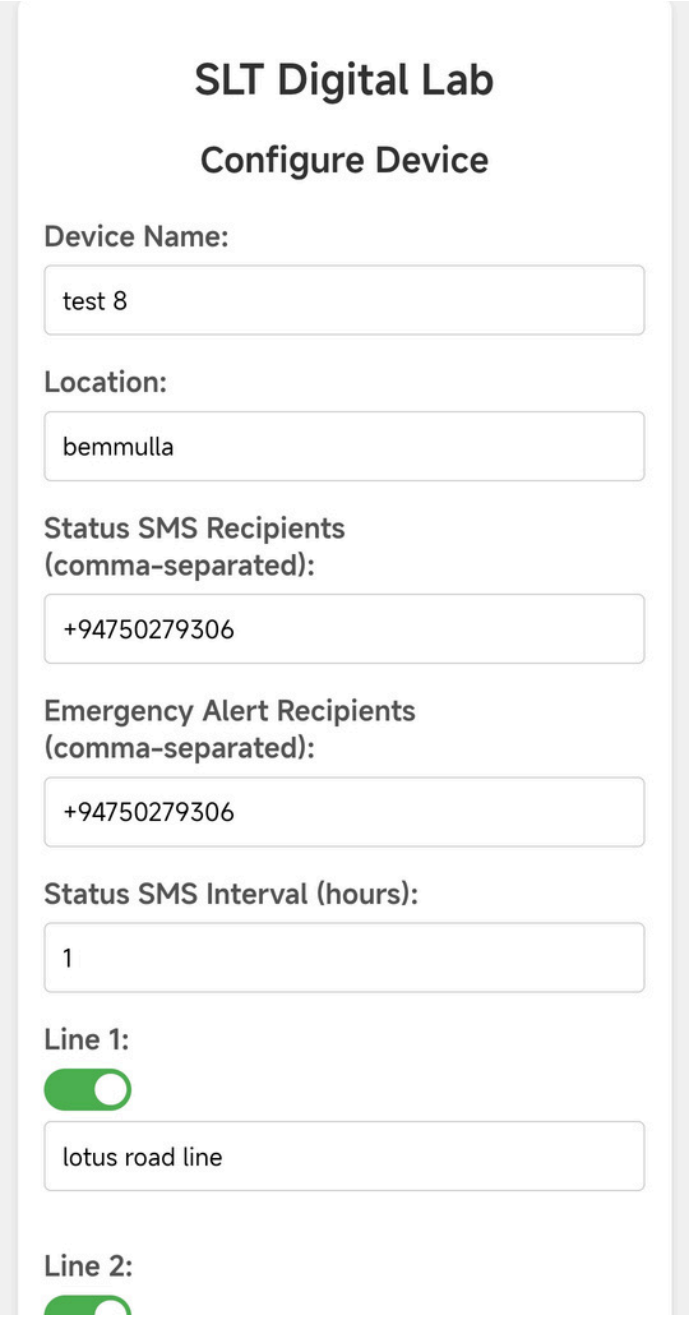

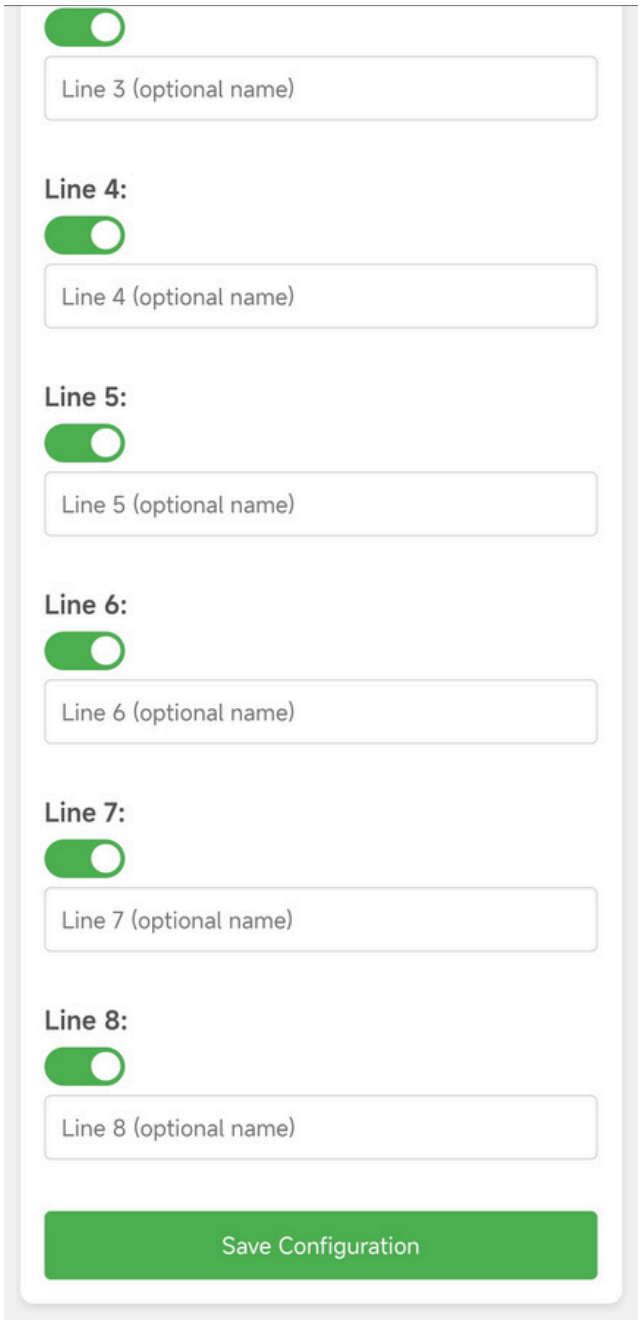

- Save Configuration:
- Click the “Save Configuration” button.
- After saving, remove power and then power on again to start normal operation.

Normal Operation

Startup Behavior:

- Upon powering on, all LEDs (L1–L8 + Status) will stay ON for 30 seconds to allow:
  - Mobile network stabilization
  - Device readiness check
- Afterward, the device will send a "boot successful" SMS to the configured status numbers.

- Monitoring & Indicators:

  - LED StateMeaning

    - Steady ON ---- Line is connected and intact
    - Blinking ---- Line is cut or tampered
    - OFF ---- Line is disabled from monitoring

- SMS Alerts:

  - Emergency SMS is sent instantly when a monitored line is cut.
  - Status SMS is sent periodically based on the configured interval.

Normal Operation

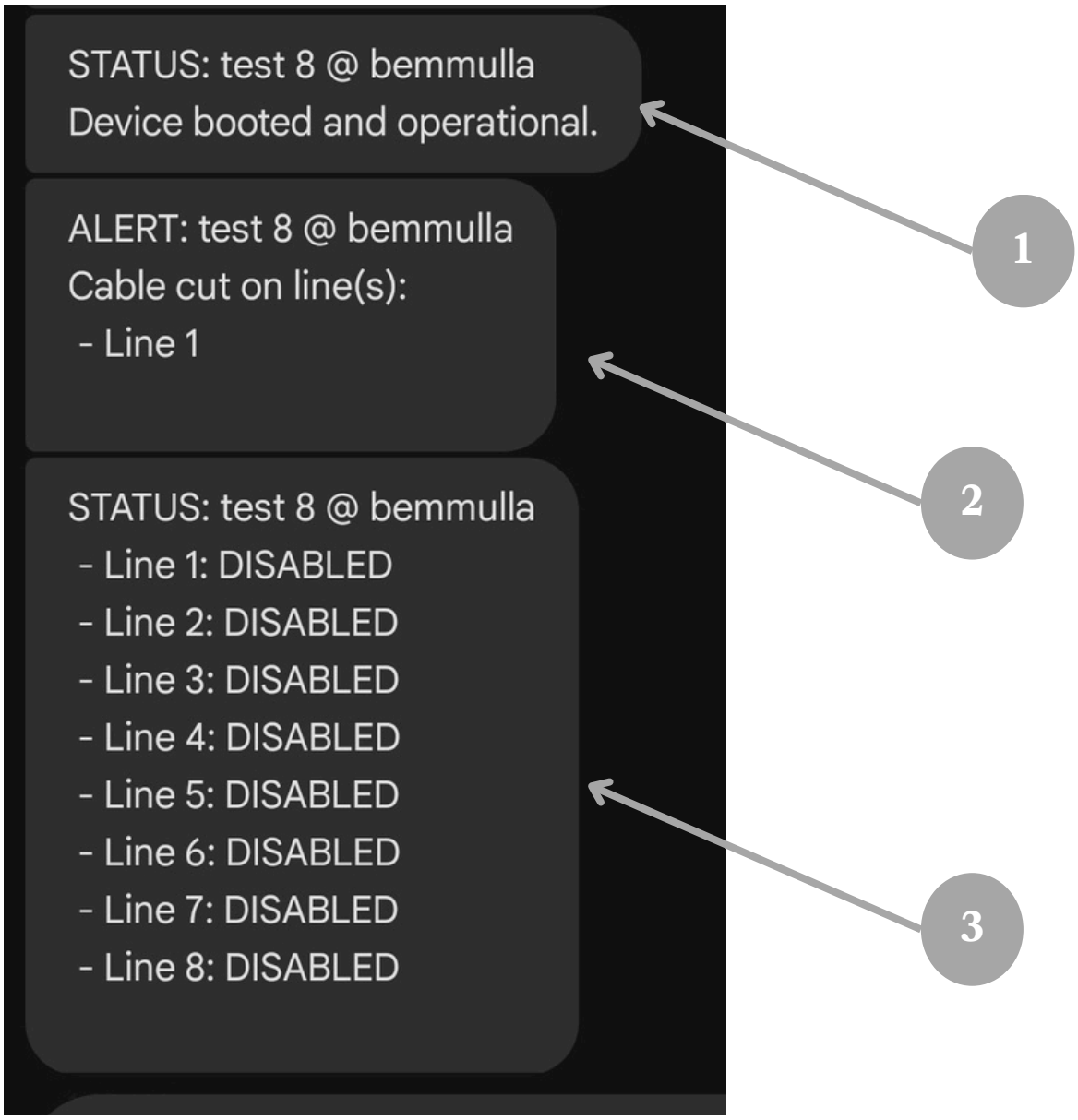

1. Device boot message
2. Line cut alert message
3. Status message

Maintenance and Troubleshooting

Routine Maintenance

Perform the following checks monthly or as part of preventive maintenance routines:

Task	Description
Visual Inspection	Check the enclosure for physical damage, corrosion, or water ingress.
Wiring Check	Ensure all terminal screws are tight and copper lines are properly seated.
LED Indicator Check	Verify all enabled line LEDs are steady ON (not blinking or off).
Power Supply	Confirm 5V 2A regulated supply is stable and connector is firmly attached.
Status SMS Verification	Check if scheduled status SMS messages are being received as expected.

Maintenance and Troubleshooting

Troubleshooting Scenarios

1. No LEDs Turn ON at Startup
- Possible Causes:
  - No power to the device
  - Faulty power supply
  - Internal damage or short
- Action:
  - Check 5V adapter and cable
  - Use a multimeter to verify voltage at the barrel input
  - Replace adapter if faulty

2. SIM800L Not Responding / No SMS Sent
- Possible Causes:
  - Weak mobile signal
  - SIM not registered to network
- Action:
  - Move device to location with better signal

3. LED for a Monitored Line is Blinking Continuously
- Meaning: Line is detected as cut or tampered
- Action:
  - Physically inspect the copper line wiring
  - Check for loose connections or damaged cable
  - If it's a false alert, verify voltage at line terminals

4. Configuration Mode Not Working
- Possible Causes:
  - Button not functioning
  - Not held before applying power
- Action:
  - Hold the button while connecting power

Maintenance and Troubleshooting

5. Device Not Broadcasting AP (Wi-Fi)

- Possible Causes:
  - Configuration mode not entered
  - Firmware error
- Action:
  - Re-enter config mode by holding the button during power-on

6. No Status SMS Received

- Possible Causes:
  - SIM connectivity issue
  - Status interval set too long
  - Numbers not saved correctly
- Action:
  - Recheck SIM card and balance
  - Set shorter SMS interval (e.g., 15 Minutes)
  - Ensure phone numbers are in international format (+94...)

Technical Specifications

Core Components:

- Microcontroller Unit:
  - Model: ESP32
  - Function: Hosts firmware logic, manages line monitoring, SMS communication, and configuration modes.
  - Features: Dual-core processor, Wi-Fi , low power consumption.

- Line Monitoring Interface:
  - Type: 8-Channel Optocoupler Array
  - Voltage Handling: Optimized for 48V DC detection
  - Function: Provides galvanic isolation and real-time line status input to the ESP32.

- Communication Module:
  - Model: SIM800L GSM Module
  - Function: Sends SMS alerts upon detection of a line cut or system heartbeat status update.
  - SIM Support: Micro SIM
  - Network: Quad-band GSM (850/900/1800/1900 MHz)

- Power Supply:
  - Input Voltage: 5V DC (regulated), supplied via 5V 2A adapter
  - Internal Conversion: Integrated 3A buck converter to power ESP32, SIM800L, and optocouplers
  - Power Resilience: Designed for continuous operation in harsh environments

- Connectivity:
  - Wiring Interface: Screw terminal blocks (pluggable) for all 8 monitored lines and power input
  - Indicator LEDs: Status indication for power, SIM connectivity, and each line channel